FARO BARCELONA

BRUME
ref. 40076

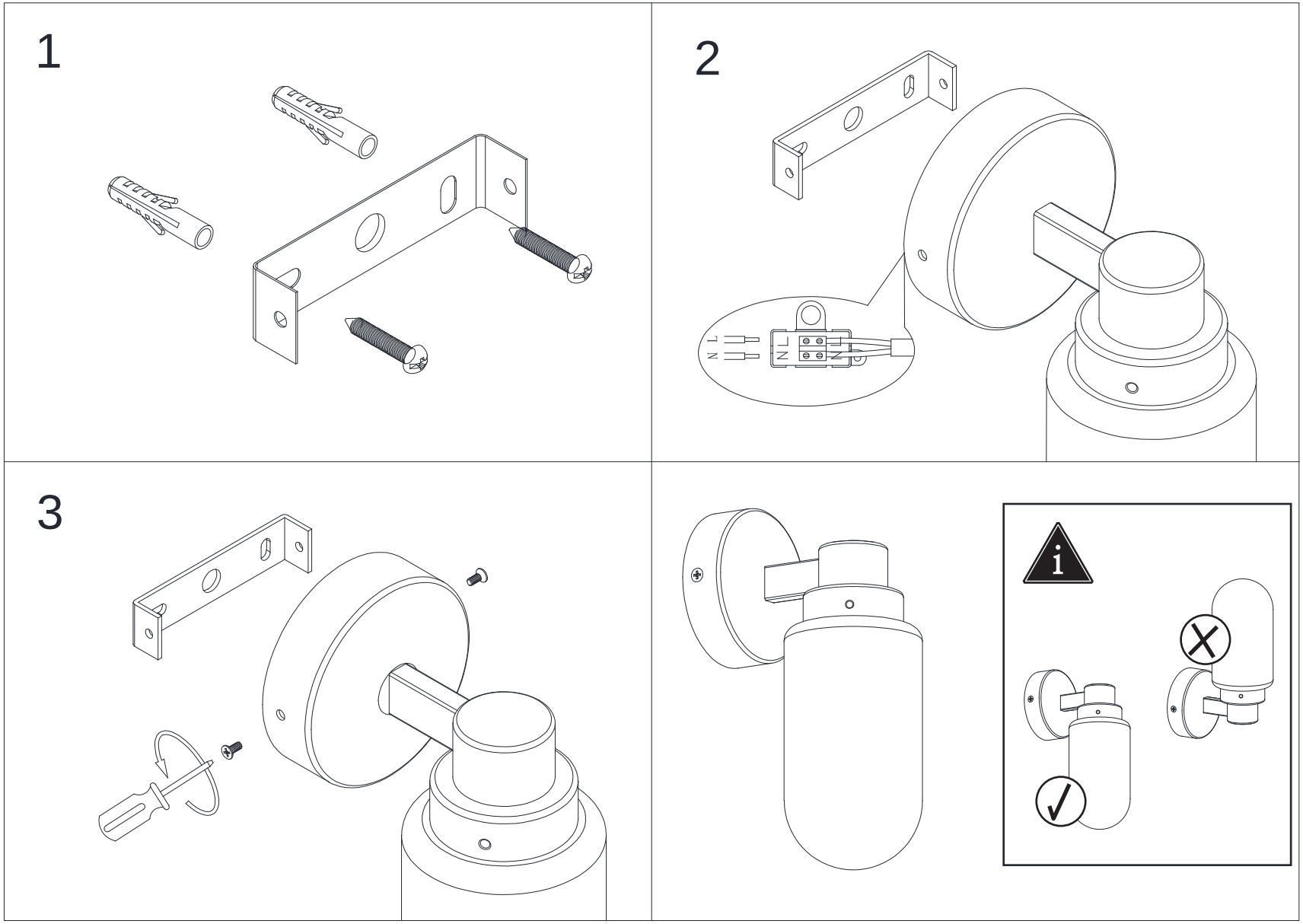

LIGHT SOURCE - FUENTE DE LUZ

CREE LED 3W 2700K 240lm >80 CRI incl

TECHNICAL FEATURES - CARACTERISTICAS TÉCNICAS

0,2m | IP44 | DRIVER BUILT-IN | 100V-240V~ 50Hz/60Hz

LOREFAR, SL • Dinámica, nº1 • Polígono Industrial Santa Rita
08755 Castellbisbal • Barcelona • Spain
faro@lorefar.com • www.faro.es