FARO BARCELONA

VIA LED
RECESSED
EMPOTRABLE

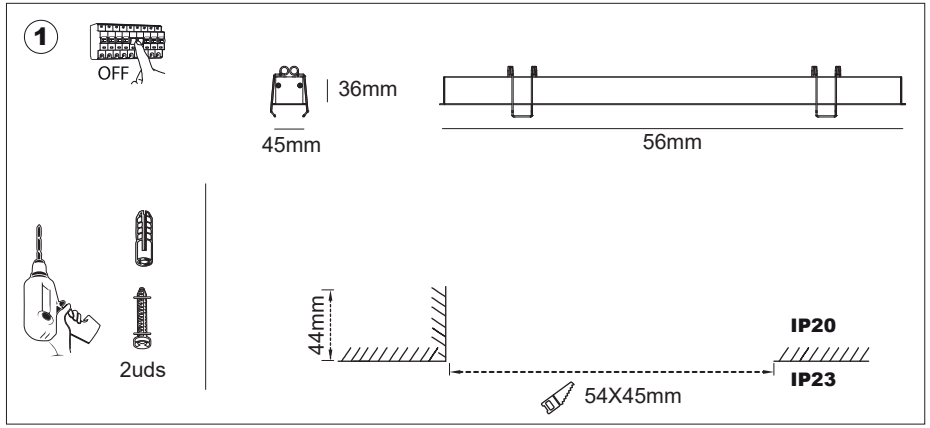

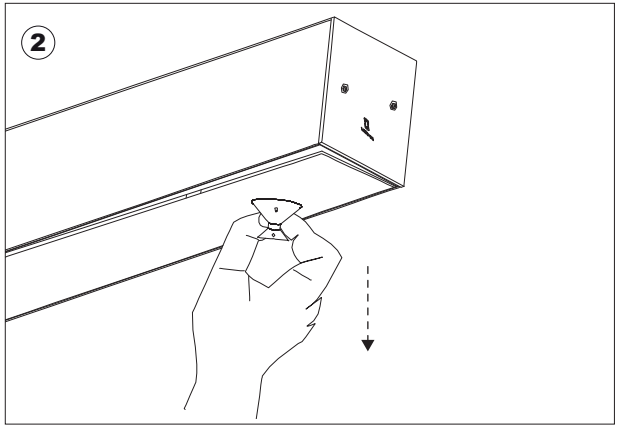

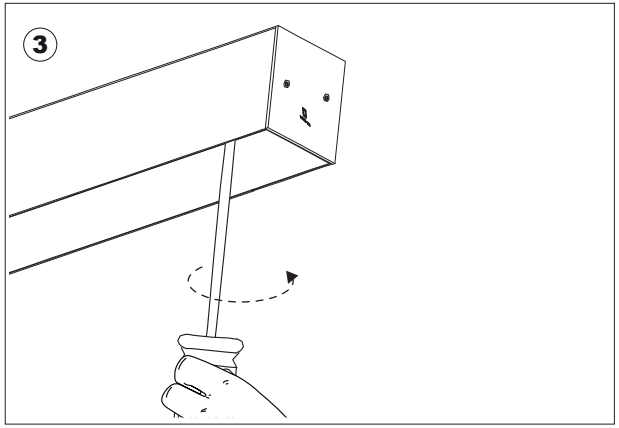

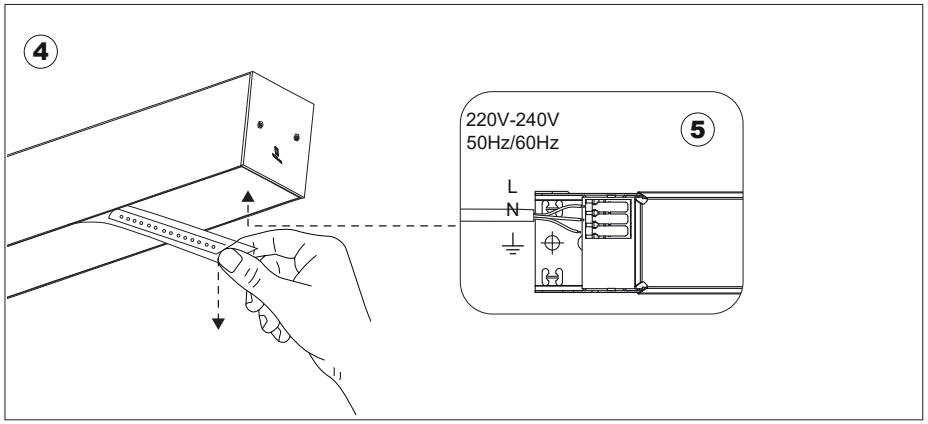

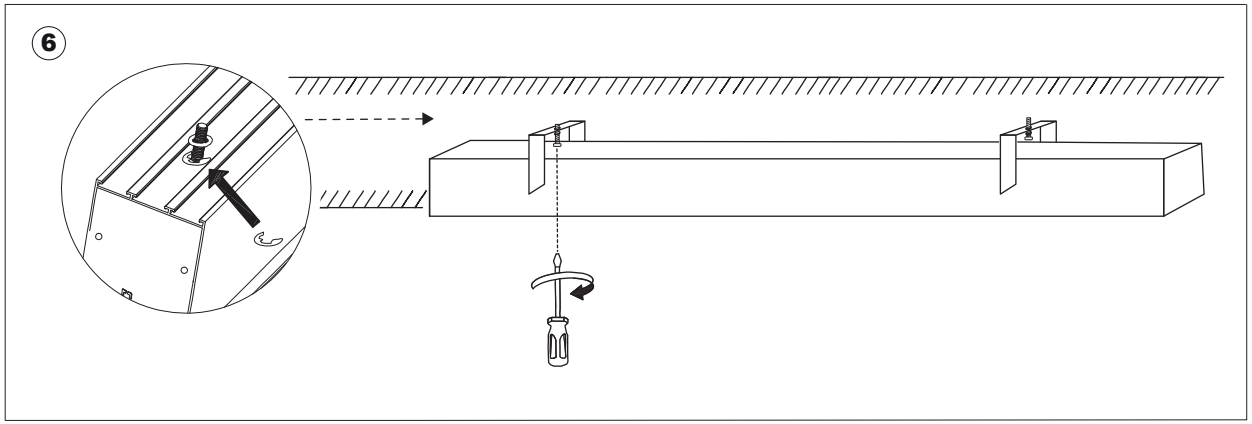

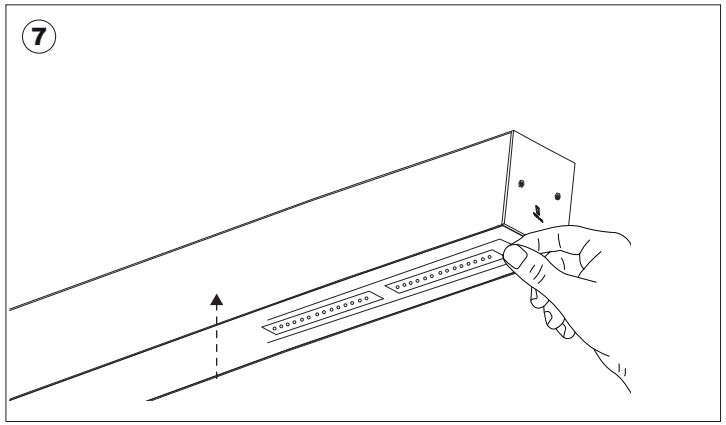

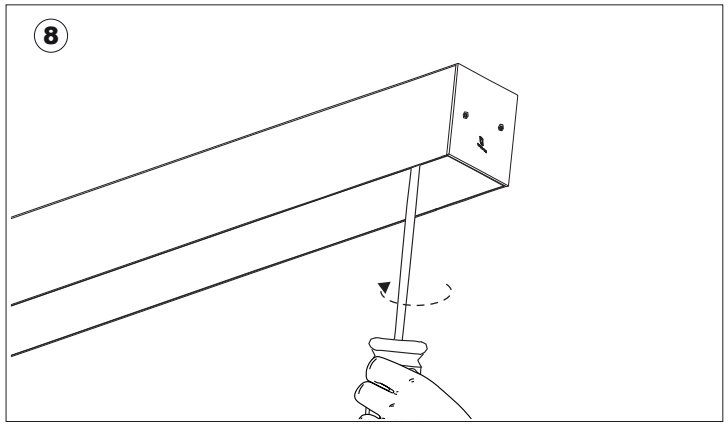

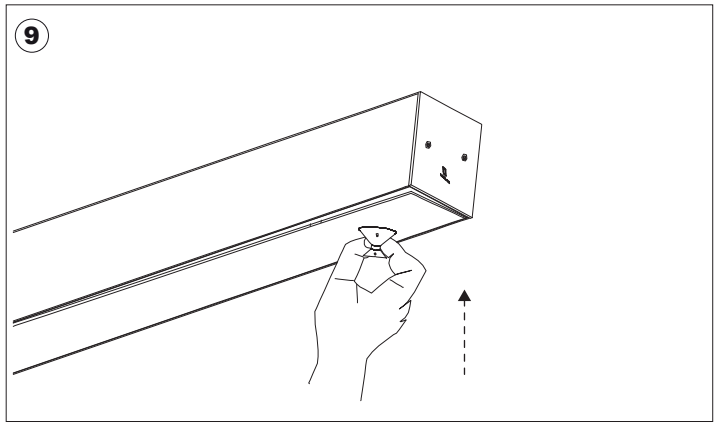

TECHNICAL FEATURES - CARACTERISTICAS TÉCNICAS

LED light surface.
for information visit www.faro.es

repair service

DRIVER INCL

220V-240V
~50Hz/60Hz

IP20
IP23

LOREFAR, SL • Dinámica, nº1 • Polígono Industrial Santa Rita • 08755 Castellbisbal • Barcelona • Spain
NACIONAL: Tel. 902 165 166 • EXPORT: Tel. +34 937 723 965 • faro@lorefar.com • www.faro.es