BARCELONA DESIGN

English

\\Nas-01\ofimatica\FICHAS TECNICAS

Продажа дизайнерской мебели, света и аксессуаров по всей России

Technical Details

RV01 - 29/02/2016

Model

8 (800) 500-70-36
hello@barcelonadesign.ru
www.barcelonadesign.ru

MANACOR

Technical Information

Frame	Frame of pine wood and MDF
Seat Suspension	N.E.A. 10 Years Guarantee
Back Suspension	Webbing 80mm
Seat Foam	Polyurethane 35kg+fibre
Seat Firmness	Medium Foam (white) *
Back Cushions	Fibre fibersilk 100%
Loose Cushions	Fibre fibersilk 100%
Legs Options	Metal or wood
Colors	Silver, natural, cherry, walnut, wenge

Comments: * You would like to know more? Check the FAQS section in our website

Guarantee

Frame	Livetime warranty
Seat Suspension	10 years
Rest of Pieces	2 years*

*6-month guaranty extension by activating it on the web

Cushions Measures

Large cushion	84x60
Small cushion	44x42

Measures

Width	x cm
Heigth	104 cm
Depth	100 cm
Seat Height	45 cm
Arm Height	65 cm
Back Height	60 cm
Depth when open	- cm
Net Weight	- kg
Gross Weight	- kg
Volume m3	- m3

Scheme

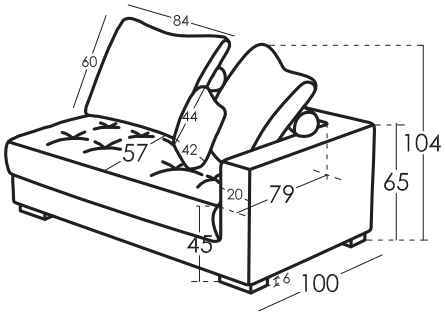

Packaging

Shrink wrapping plastic packaging with protective corner brackets

Options

Types of Standard Foam

Hardness: Soft: Grey colour 30Kg	Hardness: Medium: White colour 35Kg	Hardness: Hard: Green colour 30Kg

Types of Fire Retardant Foam

Hardness: Medium: Yellow colour 33Kg	Hardness: Soft: White colour 36Kg

* You can request a different seat hardness from the standard of the model with a small price increase

MANACOR is manufactured by Fama Sofas, whose quality system is certified by AENOR and IQNET, according to ISO 9001-2008, with certificate number ER 0790/1999.

All models have passed the tests required for granting the quality control label from Aidima-Cetem laboratories.

Enjoy the new design made in Spain

fama