# INVITING Yellow table lamp *by BOHMAN AND FOLENUS*

**Ref. 57314**

INVITING is a family designed by Bohman&Folenius for home lighting. Its main characteristic is that the light moves to accompany you according to the different needs and moods. The head of the lamp can be adjusted both in its horizontal and vertical axis, and the light is dimmable. By sliding forward and back the top circumference, you can change the intensity of the light and by rotating the same circumference, you can change the temperature of the colour. This yellow table lamp is designed to illuminate work tables, reading spaces or shelves, as well as bed heads. Includes accessory to convert the table lamp into a flexible lamp.

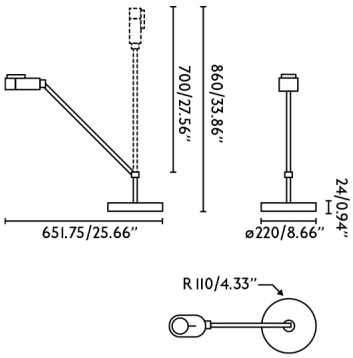


## General characteristics

| | |
|---|---|
| **Fixation** | Table |
| **Type** | II |
| **IP** | 20 |
| **voltage** | 100V-240V |
| **Hertz** | 50/60Hz |
| **Cable meters** | 1900mm |
| **Switch type** | Slider |
| **Power** | 6W |

## Lighting characteristics

| | |
|---|---|
| **Light source included** | Yes |
| **Adjustable colour temperature** | Yes |
| **LM** | 410lm |
| **CRI** | >80 |
| **Dimmable light source** | YES |
| **Light direction** | Ambient lighting |
| **Energy classification** | F |
| **Colour temperature range** | 2700 - 4800K |

## Material

| | |
|---|---|
| **Body/Structure** | Aluminium+Steel |

## Finish

| | |
|---|---|
| **Body/Structure** | Yellow |
| **Diffuser** | Transparent |

## File download

| | |
|---|---|
| **General documents** | Download > |
| **Images** | Download > |
| | Download > |
| | Download > |
| | Download > |
| | Download > |
| | Download > |
| | Download > |