BARCELONA DESIGN

English

\\Nas-01\ofimatica\FICHAS TECNICAS

Продажа дизайнерской мебели, света и аксессуаров по всей России

Technical Details

RV01 - 29/02/2016

Model

8 (800) 500-70-26
hello@barcelonadesign.ru
www.barcelonadesign.ru

PANKY

Technical Information

Frame	Frame of pine wood and MDF
Seat Suspension	N.E.A. 10 Years Guarantee
Back Suspension	——
Seat Foam	Polyurethane 35kg+fibre
Seat Firmness	Medium Foam (white) *
Back Cushions	Fibre fibersilk 100%
Loose Cushions	Fibersilk 70% + Feather 30%
Legs Options	Metal
Colors	Natural, cherry, walnut, wenge

Comments: * You would like to know more? Check the FAQS section in our website

Guarantee

Frame	Livetime warranty
Seat Suspension	10 years
Rest of Pieces	2 years*

*6-month guaranty extension by activating it on the web

Cushions Measures

Back cushion	90x50
Butterfly headrest	53x48
Arm cushion	46x40
Magic swing	40x26
Corner back	80x50
Lumbar cushion	43x36

Packaging

Shrink wrapping plastic packaging with protective corner brackets

Measures

Width	x cm
Heigth	89 cm
Depth	100 cm
Seat Height	42 cm
Arm Height	74 cm
Back Height	54 cm
Depth when open	- cm
Net Weight	- kg
Gross Weight	- kg
Volume m3	- m3

Scheme

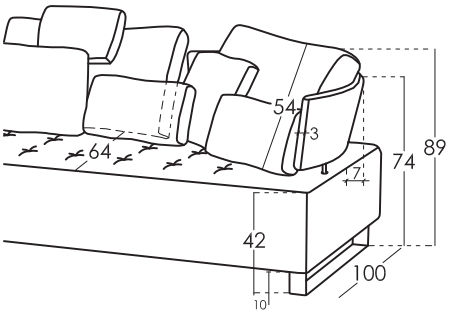

Options

Types of Standard Foam

Hardness: Soft: Grey colour 30Kg	Hardness: Medium: White colour 35Kg	Hardness: Hard: Green colour 30Kg

Types of Fire Retardant Foam

Hardness: Medium: Yellow colour 33Kg	Hardness: Soft: White colour 36Kg

* You can request a different seat hardness from the standard of the model with a small price increase

PANKY is manufactured by Fama Sofás, whose quality system is certified by AENOR and IQNET, according to ISO 9001-2008, with certificate number ER 0790/1999.
All models have passed the tests required for granting the quality control label from Aidima-Cetem laboratories.

Enjoy the new design made in Spain

fama

FAMA SOFAS S.L.U. C/ Dr. Jiménez Díaz s/n - P.O.Box 41 - 30510 YECLA (Murcia) SPAIN Telf: 968751050 / info@fama.es / www.fama.es