BARCELONA DESIGN Fire Retard

\\Nas-01\ofimatica\FICHAS TECNICAS

Technical Details

RV00 - 20/04/2016

Продажа дизайнерской мебели, света и аксессуаров по всей России

Model

KANGOU

8 (800) 500-70-36
hello@barcelonadesign.ru
www.barcelonadesign.ru

Technical Information

Frame	Steel / Metal
Seat Suspension	N.E.A. 10 Years Guarantee
Back Suspension	Solid Board
Fire Retardant Seat Foam	35kg Foam + Fibre
Fire Retardant Seat Firmness	Medium Yellow colour
Back Cushions	Fibre fibersilk 100%
Loose Cushions	Fibre fibersilk 100%
Legs Options	Swivel leg / Rocking with block
Colors	White / Light grey / Dark grey / Brown / Nickel

Comments: * You would like to know more? Check the FAQS section in our website

Guarantee

Frame	Livetime warranty
Seat Suspension	10 years
Rest of Pieces	2 years*

*6-month guaranty extension by activating it on the web

Cushions Measures

Butterfly cushion	20x31
Medium cushion	28x37

Measures

Width	70 cm
Heigth	109 cm
Depth	94 cm
Seat Height	47 cm
Arm Height	63 cm
Back Height	74cm
Depth when open	- cm
Net Weight	- kg
Gross Weight	- kg
Volume m3	0,6 m3

Scheme

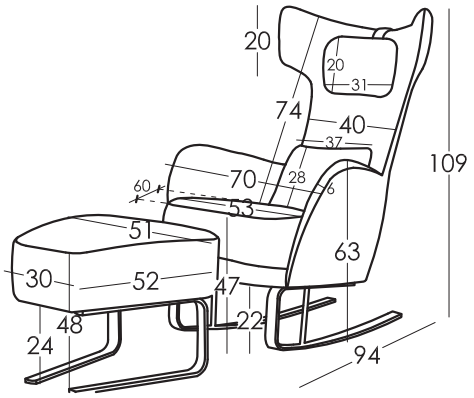

Packaging

Shrink wrapping plastic packaging with protective corner brackets

Options

Types of Standard Foam

Hardness: Soft: Grey colour 30Kg	Hardness: Medium: White colour 35Kg	Hardness: Hard: Green colour 30Kg

Types of Fire Retardant Foam

Hardness: Medium: Yellow colour 33Kg	Hardness: Soft: White colour 36Kg

* You can request a different seat hardness from the standard of the model with a small price increase

KANGOU is manufactured by Fama Sofas, whose quality system is certified by AENOR and IQNET, according to ISO 9001-2008, with certificate number ER 0790/1999.

All models have passed the tests required for granting the quality control label from Aidima-Cetem laboratories.

Enjoy the new design made in Spain

fama